CUI Devices is now Same Sky! Learn More

SERIES: CFM-40 | DESCRIPTION: DC AXIAL FAN

FEATURES

- 40 x 40 mm frame
- high fan speed for greater air flow
- dual ball bearing construction
- auto restart protection standard on all models



MODEL

	input voltage		input current		input power	rated speed	air flow[1]	static pressure[2]	noise
	rated (Vdc)	range (Vdc)	typ (A)	max (A)	max (W)	typ (RPM)	(CFM)	(inch H_2O)	max (dBA)
CFM-4010-03	5	4~5.75	0.16	0.24	1.2	8,300	10.0	0.29	37.0
CFM-4010-13	12	6~13.8	0.10	0.13	1.56	8,300	10.0	0.29	37.0

Notes: 1. At 0 inch H_2O static pressure.
2. At 0 CFM airflow.

PART NUMBER KEY

CFM-4010 - X 3 - XX - CXX

- CFM-4010 — Base Number
- X — Input Voltage
  - 0 = 5 Vdc
  - 1 = 12 Vdc
- XX — Fan Signals
  - 10 = no signals
  - 20 = tachometer signal
  - 22 = tachometer signal / PWM control signal
- CXX — Reserved for Custom Configurations

INPUT

parameter	conditions/description	min	typ	max	units
operating input voltage	5 Vdc input models 12 Vdc input models	4 6	5 12	5.75 13.8	Vdc Vdc
current	5 Vdc input models 12 Vdc input models		0.16 0.10	0.24 0.13	A A
power	5 Vdc input models 12 Vdc input models		0.80 1.20	1.2 1.56	W W
starting voltage	at 25°C 5 Vdc input models 12 Vdc input models		 4 6		 Vdc Vdc

PERFORMANCE

parameter	conditions/description	min	typ	max	units
rated speed	at 25°C, after 10 minutes	7,470	8,300	9,130	RPM
air flow	at 0 inch H_2O, see performance curves		10.00		CFM
static pressure	at 0 CFM, see performance curves		0.29		inch H_2O
noise	at 1 m		35.5	37.0	dBA

PROTECTIONS / SIGNALS[1]

parameter	conditions/description	min	typ	max	units
auto restart protection	available on all models				
tachometer signal	available on “20” and “22” models				
PWM control signal	available on “22” models				

Notes: 1. See application notes for details.

SAFETY & COMPLIANCE

parameter	conditions/description	min	typ	max	units
insulation resistance of frame	at 500 Vdc between frame and positive terminal	10			MΩ
dielectric strength	at 500 Vac, 60 Hz, 1 minute between frame and positive terminal			5	mA
safety approvals	UL/cUL 507, TUV (EN 62368-1)				
EMI/EMC	EN 55022:2010+AC:2011 Class B, EN 61000-3-2:2014, EN 61000-3-3:2013, EN 55024:2010				
life expectancy	at 45°C, 15~65% RH		70,000		hours
RoHS	yes				

ENVIRONMENTAL

parameter	conditions/description	min	typ	max	units
operating temperature		-10		70	°C
storage temperature		-40		70	°C
operating humidity	non-condensing	5		90	%
storage humidity	non-condensing	5		95	%

PERFORMANCE CURVES

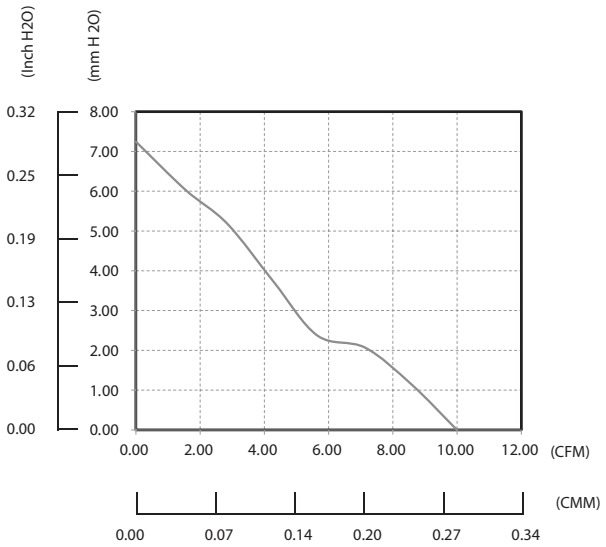

MECHANICAL

parameter	conditions/description	min	typ	max	units
motor	4 pole DC brushless				
bearing system	ball bearing				
direction of rotation	counter-clockwise viewed from front of fan blade				
dimensions	40 x 40 x 10.6				mm
material	PBT (UL94V-0)				
weight	5 Vdc input models 12 Vdc input models		13.5 14.2		g g

MECHANICAL DRAWING

units: mm [inch]

wire: UL 1061, 28 AWG

WIRE CONNECTIONS	
Wire Color	Function
Red	+Vin
Black	-Vin
Yellow[1]	FG Signal
Blue[1]	PWM

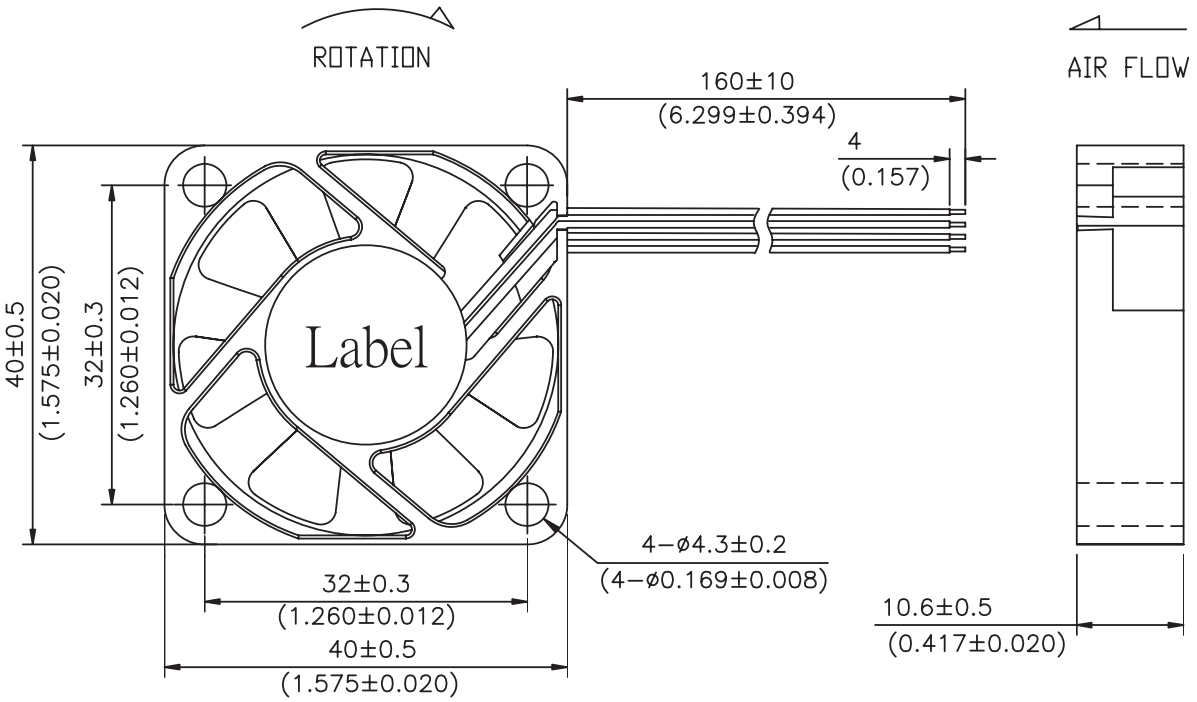

Note: 1. Wires only present on versions with output signals.

APPLICATION NOTES

Auto Restart Protection/Current Limit Protection

When the fan motor is locked, the device will cut off the drive current within two to six seconds and restart automatically after a few seconds. If the lock situation is continued, the device will work on a repeated cycle of cut-off and restart until the lock is released. (See Figure 1 below).

Figure 1 Current Limit Protection

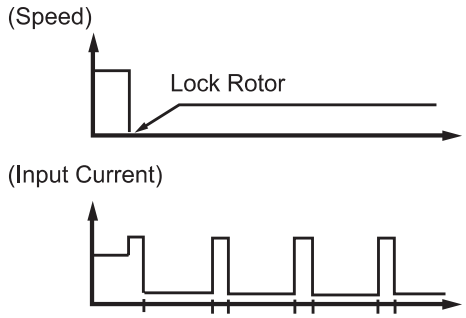

Pulse Sensor/Tachometer Signal/FG

Pulse Sensor is for detecting the rotational speed of the fan motor. At locked rotor condition, the signal stops cycling and the output is fixed at VoH or VoL (See Figures 2~3 below).

Figure 2 Output Waveform

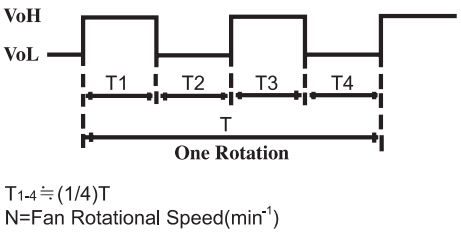

$T_{1-4} \fallingdotseq (1/4)T$

N=Fan Rotational Speed(min^{-1})

Figure 3 FG Signal Output Circuit: Open Collector

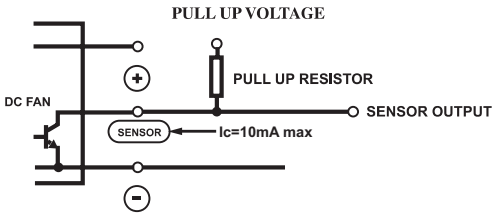

PMW Control Signal

A speed control lead can be provided that will accept a PWM signal from the customer circuit to vary the speed of the fan. The change in speed is linear by changing the Duty-Cycle of the PWM. Open collector type and pull-up voltage is changed by maximum operating voltage and sink current by consuming current. (See Figure 4 below).

Figure 4 Duty Cycle

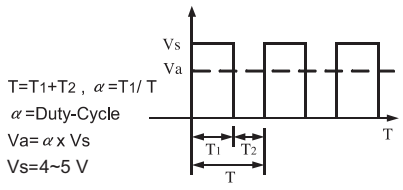

$T=T_1+T_2$, $\alpha = T_1/T$

α=Duty-Cycle

Va= α x Vs

Vs=4~5 V

REVISION HISTORY

rev.	description	date
1.0	initial release	08/15/2016
1.01	updated datasheet	07/27/2017
1.02	updated to be certified to EN 62368-1 safety standard	07/09/2019
1.03	brand update	02/07/2020
1.04	logo, datasheet style update	08/12/2022
1.05	CUI Devices rebranded to Same Sky	09/12/2024

The revision history provided is for informational purposes only and is believed to be accurate.

Same Sky offers a one (1) year limited warranty. Complete warranty information is listed on our website.

Same Sky reserves the right to make changes to the product at any time without notice. Information provided by Same Sky is believed to be accurate and reliable. However, no responsibility is assumed by Same Sky for its use, nor for any infringements of patents or other rights of third parties which may result from its use.

Same Sky products are not authorized or warranted for use as critical components in equipment that requires an extremely high level of reliability. A critical component is any component of a life support device or system whose failure to perform can be reasonably expected to cause the failure of the life support device or system, or to affect its safety or effectiveness.